NOTES:

1) GALVANIZING DRAIN/VENT HOLES AT ALL TYPICAL POS'NS SHN 'GD' - MIN 10 DIA. (NO SEALED TUBES)

2) ALL HOT DIP GALVANIZED AFTER FABRICATION

3) TYPICAL SECTION THRU' & GENERAL NOTES AS SHOWN ON DRG J9189 - 01

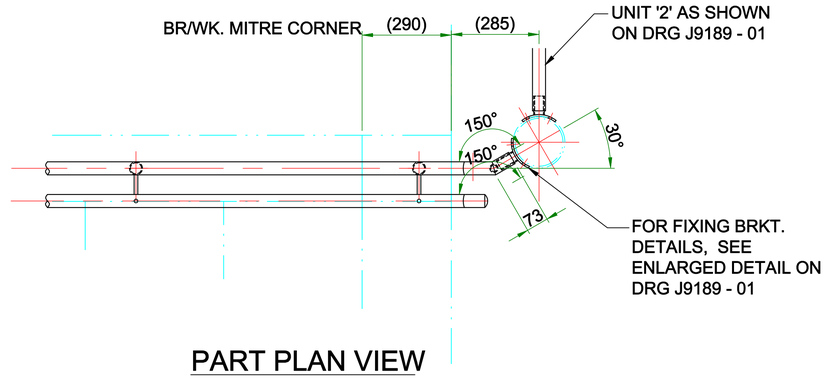

PART PLAN VIEW

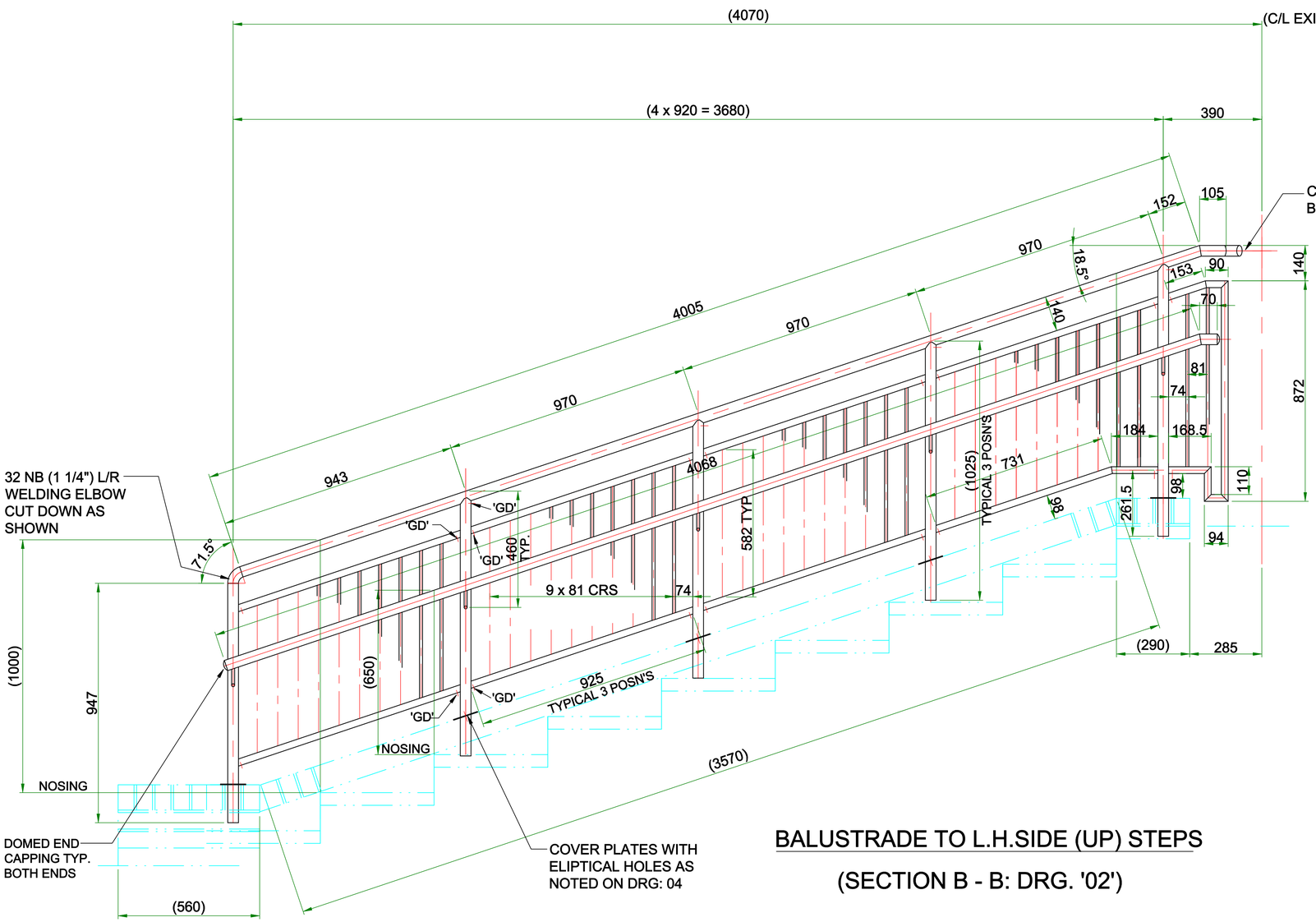

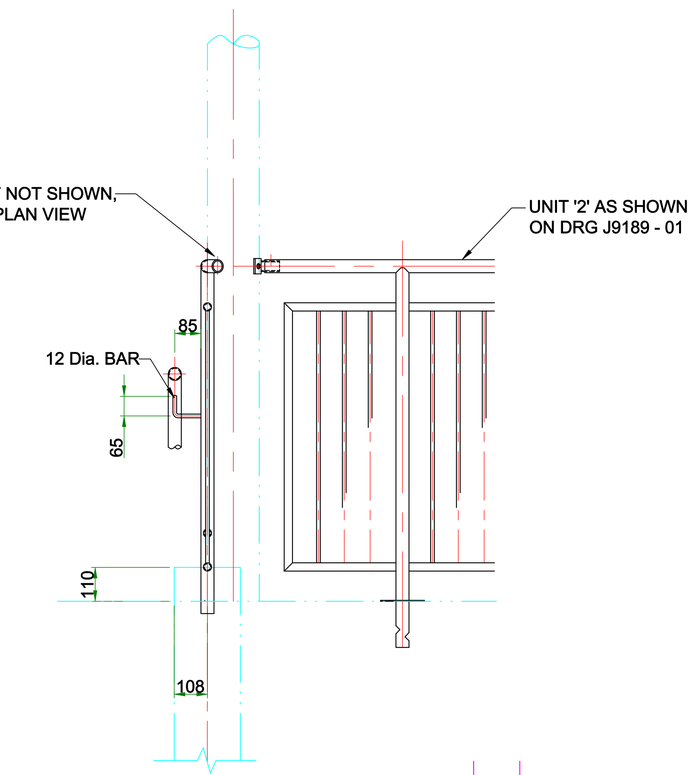

BALUSTRADE TO L.H.SIDE (UP) STEPS

(SECTION B - B: DRG. '02')

Rev	Amendments	Date / Sig.
Dm. MC	Date JUNE 09	Scales 1 : 10
Chkd.	Date	

Client: QUEENS' SCHOOL BUSHEY

Project: EXTERNAL BALUSTRADES TO SPORTS HALL AREA

SIMCROSS WELDING SERVICES LTD.
THE MAINTENANCE DEPOT, FURTHERFILED, OFF SOUTH WAY
ABBOTS LANGLEY HERTS. WD5 0PL
Tel: 01923 264415 Fax: 01923 267536

Drawing Title: BALUSTRADE DETAILS - 04

Drawing No. J9189 - 04 | Rev.